MANTEL INSTALLATION GUIDE

STYLE | QUALITY | SELECTION

Evermark, LLC 1050 Northbrook Parkway, Suwanee, GA 30024 678.455.5188 www.Evermark-LNL.com

READ ALL INSTRUCTIONS AND REVIEW DIAGRAMS BEFORE BEGINNING THE INSTALLATION TO GET A THOROUGH UNDERSTANDING OF THE PROCESS.

SAFETY NOTICES

Always practice safety and use appropriate eye, ear, and respiratory protection when using power tools.

Do not put heavy weight on mantel (over 20 pounds is not recommended). Do not let children climb on or pull on the mantel. Check local fire code and instruction from manufacturer of the fireplace insert or stove for proper clearance between any wood mantel surface and firebox opening (typically 12"). Evermark, LLC® cannot be held responsible for the incorrect installation of the mantel shelf and/or leg/skirt kit.

MATERIALS REQUIRED

FOR INSTALLATION INTO DRYWALL:

- Hammer
- Caulking Gun
- Stud Finder
- Level
- Power Drill
- Drill Bit 3/32"
- 1-1/2" Finish Nails
- 2-1/2" Drywall Screws
- Drywall Anchors (optional)
- Construction Adhesive (i.e. Liquid Nails)
- Wood Filler
- Phillips Head Screwdriver

FOR INSTALLATION INTO MASONRY / BRICK:

- Hammer
- Caulking Gun
- Stud Finder
- Level
- Power Drill
- Drill Bit 3/32"
- Phillips Head Screwdriver
- 1-1/2" Finish Nails
- 2-1/2" Masonry Screws and Drill Bits
- Construction Adhesive (i.e. Liquid Nails)
- Wood Filler

⚠ **WARNING:** Cancer and Reproductive Harm www.P65warnings.ca.gov

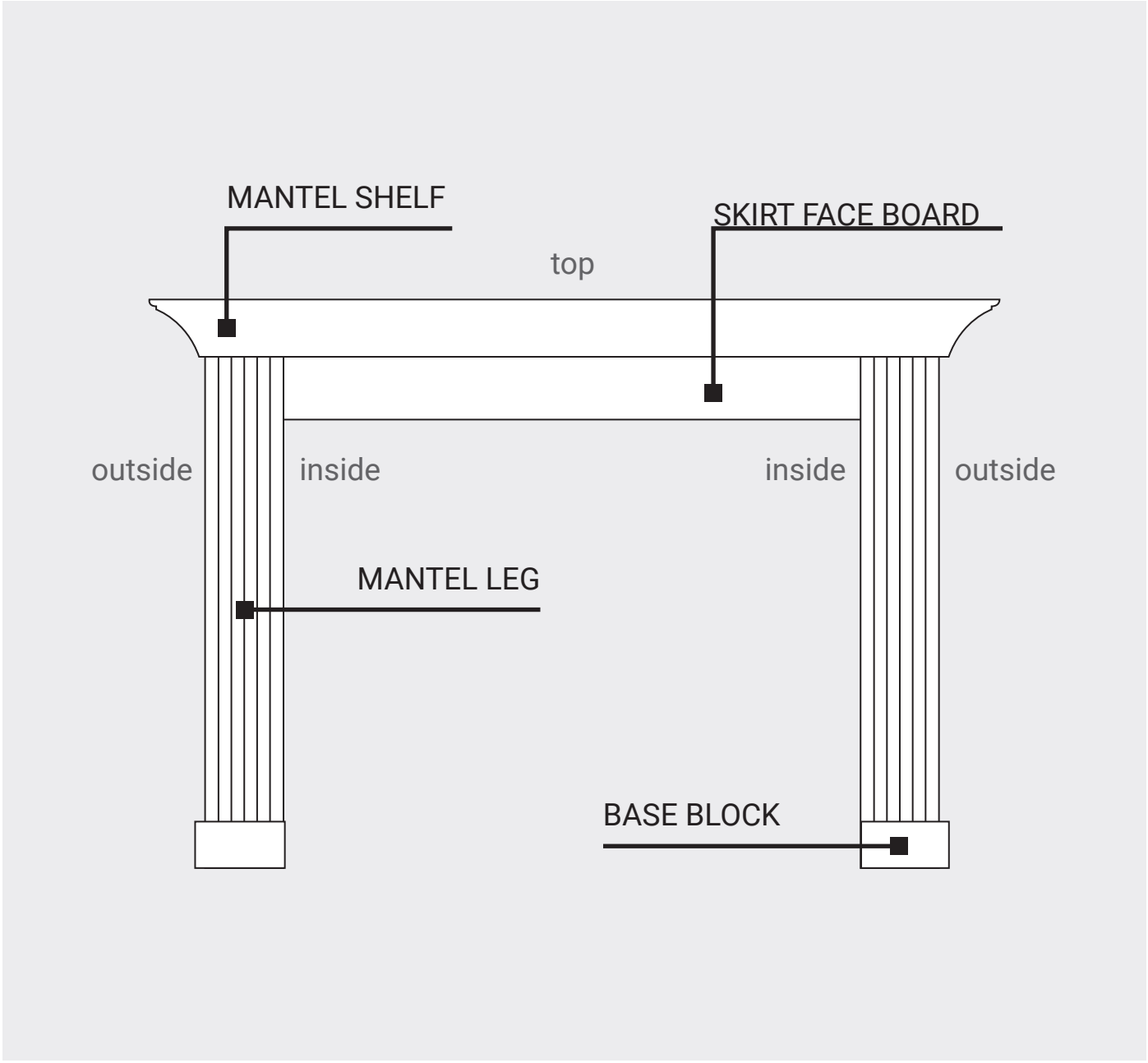

California's Proposition 65 entitles California consumers to special warnings for certain products that contain chemicals above certain threshold levels. The general Proposition 65 notice is as follows: **WARNING:** Drilling, sawing, sanding or machining wood products can expose you to wood dust, a substance know to the state of California to cause cancer. Avoid inhaling wood dust or use a dust mask or other safeguards for personal protection. For more information, go to www.P65warnings.ca.gov

SIMPLE MANTEL INSTALLATION

(MANTEL KIT ONLY)

1. Remove mantel shelf from box and gather materials required to complete the installation. Always practice safety and use appropriate eye, ear, and respiratory protection when using power tools. If you are planning on installing the full fireplace surround, you will need to purchase the **Evermark Leg and Skirt Kit** and use the 4-PIECE FIREPLACE SURROUND INSTALLATION instructions instead.

2. Decide whether or not you are going to paint or stain the mantel shelf before or after installation. If before, paint or stain the mantel shelf to the color of your choosing (follow finishing guidelines provided by the coating manufacturer). If after, proceed to the next step and finish the mantel shelf after the following steps have been completed.

3. Determine your desired mantel shelf height based on the top edge of the mantel (typically 50"–55" from floor or a predetermined height).

4. After your desired height is determined, subtract 1/2" from measurement and mark this height on the wall.

5. Align top of mounting board with mark in step 4. Using the included mounting board and level, draw faint line on the wall along the top mounting board.

6. Using a stud finder, locate the studs behind the drywall and mark the location on the wall.
   NOTE:
   - If studs are present, use drywall screws driven directly into studs (preferred method).
   - If studs are not present, you may use drywall anchors driven directly into the drywall surface (per hardware manufacturer's instructions) but this is not the preferred method.

7. Place the mounting board against the wall and transfer the locations of the studs from the wall to the mounting board using a pencil.

8. Using a 3/32" drill bit, pre-drill holes on the mounting board 3/4" from the edge at the stud locations marked on the mounting board.

9. Attach mounting board to wall with fasteners and construction adhesive. Ensure the mounting board is level and centered prior to permanent mounting. Drive a minimum of three fasteners (*see below) into the surface.
   * Brick= 2-1/2" masonry screws
   * Drywall= 2-1/2" drywall screws or appropriate drywall anchors (installed per the manufacturer's instructions)

   IMPORTANT: Do not omit the use of construction adhesive between the mounting board and drywall as it helps distribute the weight of the mantel and anything displayed on top of the mantel.

10. Apply construction adhesive to the top of the mounting board. Place mantel shelf over the mounting board and ensure that it fits snug against wall surface.

11. Pre-drill holes with 3/32" bit for finish nails 3/4" from the back of the mantel shelf every 12-18" across the length of the mantel.

12. Insert finish nails into the pre-drilled holes on the top of the mantel. With a hammer, sink the nail heads below the mantel surface.

13. Fill nail holes with matching wood filler. Allow glue and wood filler to dry overnight before placing any objects on your new mantel.

⚠ **WARNING:** Cancer and Reproductive Harm www.P65warnings.ca.gov

4-PIECE FIREPLACE SURROUND INSTALLATION

(ADDITIONAL LEG & SKIRT KIT REQUIRED)

1. Remove leg/skirt kit and mantel shelf from boxes being careful to keep mantel and leg mounting boards separate due to different lengths. Gather materials required to complete the installation. Always practice safety and use appropriate eye, ear, and respiratory protection when using power tools.

2. Decide whether or not you are going to paint or stain the mantel shelf and leg/skirt kit before or after installation. If before, paint or stain the mantel shelf to the color of your choosing (follow finishing guidelines provided by the coating manufacturer). If after, proceed to the next step and finish the mantel shelf and leg/skirt after the following steps have been completed.

3. Place legs into position on either side of the fireplace making sure the distance from the fireplace is equal on both sides. Note the height of the legs at the top and cut to length if necessary using a chop saw.

4. Using a level, plumb the legs to the wall. Draw a line down the wall along the outside of each leg (figure A & B).

Fig A

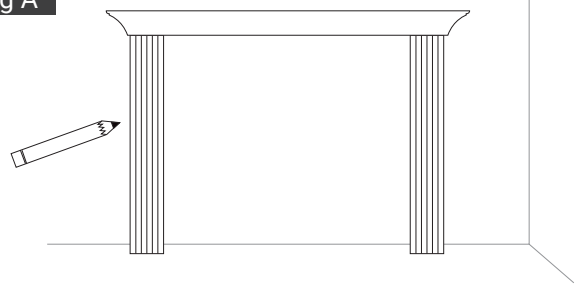

Fig B

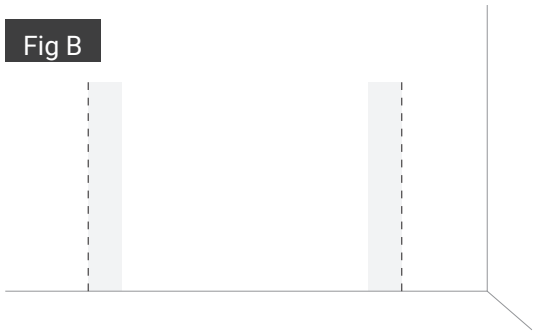

5. Remove the legs from the wall and draw a few parallel pencil lines 1/2" inside each of the scribe lines. The inside lines mark the outside edges of the mounting boards (figure C).

Fig C

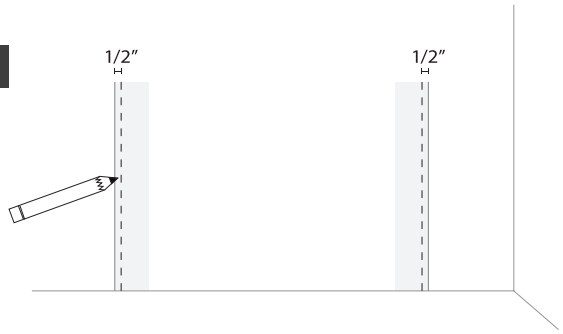

6. Using a level, plumb each of the mounting boards vertically inside the lines created in step 5 and scribe a faint pencil line on the wall.

7. Using construction adhesive and appropriate hardware for the mounting surface (drywall or masonry screws, drywall anchors), attach the outside edge of the mounting board to the inside edge of the pencil lines on the wall.
   - Brick= 2-1/2" masonry screws
   - Drywall= 2-1/2" drywall screws or appropriate drywall anchors (installed per the manufacturer's instructions)

8. Place legs into position against mounting boards, making sure openings are up and towards the inside. Attach the legs to the mounting boards using finish nails or wood screws approximately every 12-18".

⚠ **WARNING:** Cancer and Reproductive Harm www.P65warnings.ca.gov

4-PIECE FIREPLACE SURROUND INSTALLATION

(Continued)

Use a 3/32" drill bit to pre-drill any nail holes.

9. Measure the inside distance between skirt legs. Trim skirt face board to this length minus 1/2" (figure D). Insert skirt face board into leg edge openings with the skirt face board return facing down to ensure that it fits properly (figure E).

Fig D

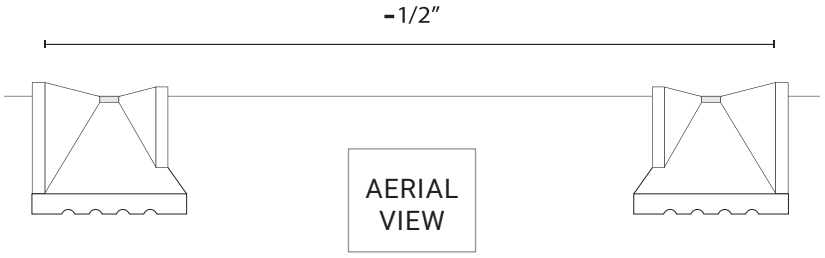

Fig E

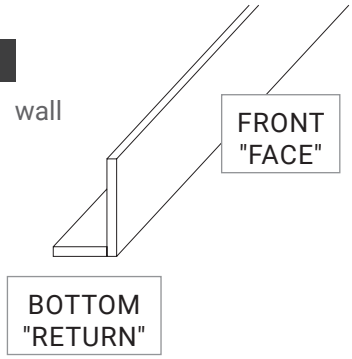

10. Attach front of skirt face board to the inside of legs using construction adhesive (be careful to avoid adhesive squeeze-out).

11. Place mantel shelf over mantel mounting board, resting it on top of the legs. Confirm that it fits snug against all surfaces.

12. Draw a faint line to mark the top of the edge of the mantel (figure F). Be sure the shelf is level.

Fig F

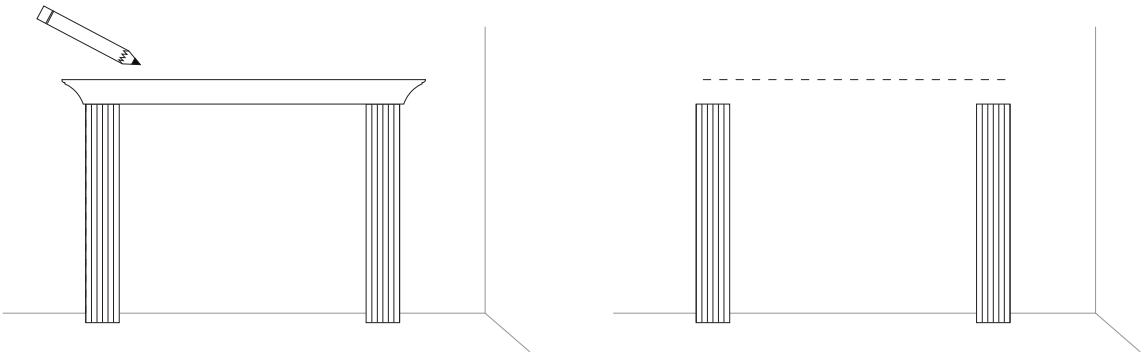

13. Remove the mantel shelf and draw a parallel pencil line 1/2" below the line created in step 12 (figure G). This line indicates the top of the mounting board supplied with your mantel shelf.

Fig G

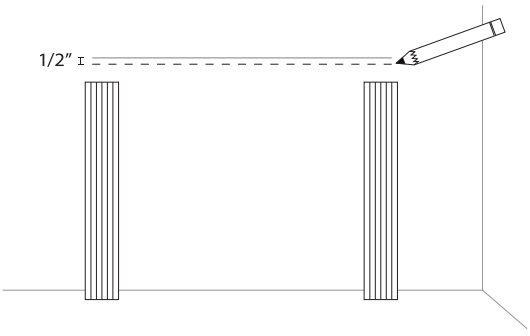

⚠ **WARNING:** Cancer and Reproductive Harm www.P65warnings.ca.gov

4-PIECE FIREPLACE SURROUND INSTALLATION

(Continued)

14. Using a stud finder, locate the studs behind the drywall and mark the location on the wall.
    NOTE:
    - If studs are present, use drywall screws driven directly into studs (preferred method).
    - If studs are not present, you may use drywall anchors driven directly into the drywall surface (per hardware manufacturer's instructions) but this is not the preferred method.

15. Place the mounting board against the wall and transfer the locations of the studs from the wall to the mounting board using a pencil.

16. Using a 5/32" drill bit, pre-drill holes on the mounting board 3/4" from the edge at the stud locations marked on the mounting board.

17. Attach mounting board to wall with fasteners and construction adhesive. Ensure the mounting board is level and centered prior to permanent mounting. Drive a minimum of three fasteners (*see below) into the surface.

    * Brick= 2-1/2" masonry screws
    * Drywall= 2-1/2" drywall screws or appropriate drywall anchors (installed per the manufacturer's instructions)

    IMPORTANT: Do not omit the use of construction adhesive between the mounting board and drywall as it helps distribute the weight of the mantel and anything displayed on top of the mantel.

18. Apply construction adhesive to the top of the mounting board. Place mantel shelf over the mounting board resting it on top of the legs. Ensure that it fits snug against wall surface.

19. Pre-drill holes for finish nails 3/4" from the back of the mantel shelf every 12-18" across the length of the mantel.

20. Insert finish nails into pre-drilled holes through the mantel. With a hammer and nailset sink the nail heads below the mantel surface.

21. Attach pre-assembled base corner blocks to bottom of each leg using construction adhesive and finish nails being sure to pre-drill any nail holes.

22. Fill nail holes with matching wood filler. Allow glue and wood filler to dry overnight before placing any objects on your new mantel.

⚠ **WARNING:** Cancer and Reproductive Harm www.P65warnings.ca.gov

© 2020 Evermark, LLC. All rights reserved.